

System Impact Assessment Report

Final Report - Public

CAA ID: 2020-683
Project: Oneida Energy Storage
Connection Applicant: Oneida Energy Storage LP

April 14, 2022

ieso
Connecting Today.
Powering Tomorrow.

Acknowledgement

The IESO wishes to acknowledge the assistance of Hydro One in completing this assessment.

Disclaimers

IESO

This report has been prepared solely for the purpose of assessing whether the connection applicant's proposed connection with the IESO-controlled grid would have an adverse impact on the reliability of the integrated power system and whether the IESO should issue a notice of conditional approval or disapproval of the proposed connection under Chapter 4, section 6 of the Market Rules.

Conditional approval of the project is based on information provided to the IESO by the connection applicant and Hydro One at the time the assessment was carried out. The IESO assumes no responsibility for the accuracy or completeness of such information, including the results of studies carried out by Hydro One at the request of the IESO. Furthermore, the conditional approval is subject to further consideration due to changes to this information, or to additional information that may become available after the conditional approval has been granted.

If the connection applicant has engaged a consultant to perform connection assessment studies, the connection applicant acknowledges that the IESO will be relying on such studies in conducting its assessment and that the IESO assumes no responsibility for the accuracy or completeness of such studies including, without limitation, any changes to IESO base case models made by the consultant. The IESO reserves the right to repeat any or all connection studies performed by the consultant if necessary to meet IESO requirements.

Conditional approval of the proposed connection means that there are no significant reliability issues or concerns that would prevent connection of the proposed project to the IESO-controlled grid. However, the conditional approval does not ensure that a project will meet all connection requirements. In addition, further issues or concerns may be identified by the transmitter(s) during the detailed design phase that may require changes to equipment characteristics and/or configuration to ensure compliance with physical or equipment limitations, or with the Transmission System Code, before connection can be made.

This report has not been prepared for any other purpose and should not be used or relied upon by any person for another purpose. This report has been prepared solely for use by the connection applicant and the IESO in accordance with Chapter 4, section 6 of the Market Rules. This report does not in any way constitute an endorsement of the proposed connection for the purposes of obtaining a contract with the IESO for the procurement of supply, generation, demand response, demand management or ancillary services.

The IESO assumes no responsibility to any third party for any use, which it makes of this report. Any liability which the IESO may have to the connection applicant in respect of this report is governed by Chapter 1, section 13 of the Market Rules. In the event that the IESO provides a draft of this report to the connection applicant, the connection applicant must be aware that the IESO may revise drafts of this report at any time in its sole discretion without notice to the connection applicant. Although the IESO will use its best efforts to advise you of any such changes, it is the responsibility of the connection applicant to ensure that the most recent version of this report is being used.

Hydro One

The results reported in this report are based on the information available to Hydro One, at the time of the study, suitable for a System Impact Assessment of this connection proposal.

The short circuit and thermal loading levels have been computed based on the information available at the time of the study. These levels may be higher or lower if the connection information changes as a result of, but not limited to, subsequent design modifications or when more accurate test measurement data is available.

This study does not assess the short circuit or thermal loading impact of the proposed facilities on load and generation customers.

In this report, short circuit adequacy is assessed only for Hydro One circuit breakers. The short circuit results are only for the purpose of assessing the capabilities of existing Hydro One circuit breakers and identifying upgrades required to incorporate the proposed facilities. These results should not be used in the design and engineering of any new or existing facilities. The necessary data will be provided by Hydro One and discussed with any connection applicant upon request.

The ampacity ratings of Hydro One facilities are established based on assumptions used in Hydro One for power system planning studies. The actual ampacity ratings during operations may be determined in real-time and are based on actual system conditions, including ambient temperature, wind speed and facility loading, and may be higher or lower than those stated in this study.

The additional facilities or upgrades which are required to incorporate the proposed facilities have been identified to the extent permitted by a System Impact Assessment under the current IESO Connection Assessment and Approval process. Additional facility studies may be necessary to confirm constructability and the time required for construction. Further studies at more advanced stages of the project development may identify additional facilities that need to be provided or that require upgrading.

Table of Contents

Acknowledgement **1**

Disclaimers **2**

IESO 2

Hydro One 3

Project Description **5**

Notification of Conditional Approval **6**

Assessment Findings **6**

IESO Requirements for Connection **7**

Recommendation **8**

Appendix A: General Requirements **9**

Appendix B: Project Data (Confidential) **15**

Appendix C: Study Scope of Work (Confidential) **15**

Appendix D: Detailed Study Results (Confidential) **15**

Appendix E: Protection Impact Assessment (Confidential) **15**

Project Description

Oneida Energy Storage LP (the "connection applicant") is proposing to connect a new battery energy storage facility capable of providing up to 250 MW/1000 MWh, in Haldimand County, Ontario (the "project"). The facility will be connected to the 230 kV circuits N21J and N22J, near Jarvis Transformer Station (TS), that are owned and operated by Hydro One Networks Inc. (the "transmitter").

The project will include two hundred and seventy-five (275) outdoor battery containers connected to the 34.5 kV feeders through ninety-two (92) padmount transformers. The 34.5 kV collector system is very short and it is connected to the 230 kV system through two 150 MVA transformers.
The 250 MW battery will be operated as 235 MW of capacity and ±15 MW of regulation. The connection applicant plans to be capable of providing three more 15 MW blocks of regulation. Therefore, there are five possible capacity/regulation configurations, i.e., 250/0, 235/15, 220/30, 205/45 and 190/60 MW. Figure 1 shows the single line diagram of Oneida Energy Storage.

The planned in-service date for the project is June 2023.

Figure 1: Single line diagram of Oneida Energy Storage

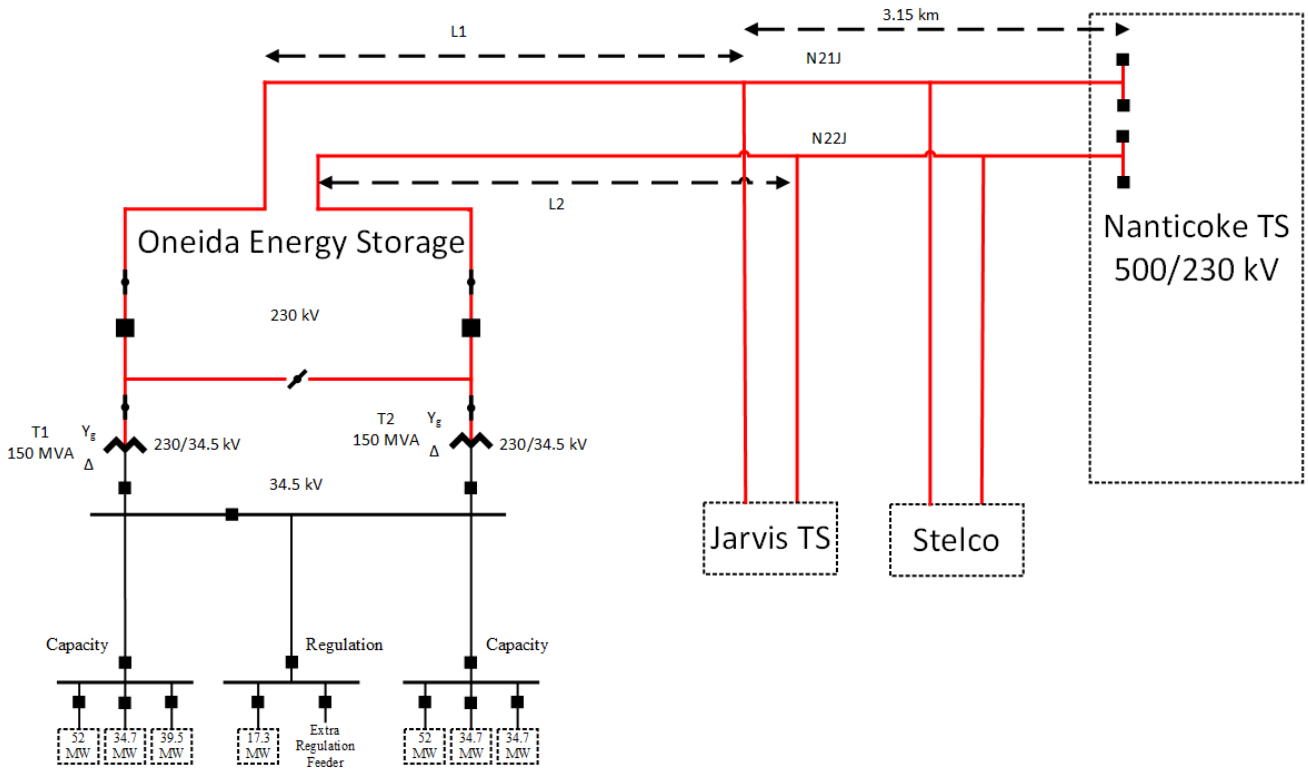

Notification of Conditional Approval

This assessment concludes that the proposed connection of the project is expected to have no material adverse impact on the reliability of the integrated power system, provided that all requirements in this report are implemented. Therefore, the assessment supports the release of the Notification of Conditional Approval for connection of the project.

Assessment Findings

System studies were carried out to identify the impact of the project on loading of transmission facilities, system voltages and transient performance in line with applicable reliability standards. The studied scenarios and main assumptions are available in Appendix C of this report. The detailed study results are available in Appendix D of this report. Based on the assessment results, the following assessment findings were identified.

1. Within the scope of the connection assessments study, the project is expected to be able to inject or withdraw maximum power of 250 MW without negatively impacting the integrated power system. However, certain system conditions beyond the scope of this study may limit the amount of power that can be injected to or withdrawn from the system.
2. The project's reactive power capability as assessed at the high-voltage terminals of the main output transformer does not meet the requirements of Category 5 in Appendix 4.2 of the Market Rules. The project is able to inject reactive power up to 28.4% of rated active power, at the typical system voltage of 243.1 kV at Nanticoke TS, while injecting at maximum output; however, the Market Rules requirement is to inject 33% of the rated active power. This limitation is mainly due to the high impedance of the main output transformers, which is equivalent to 21.1% on the rated apparent power of the project.
3. The main output transformers at the project will be loaded above their continuous rating when the project is operating at its full active power and reactive power capability; however, their MVA size is adequate to allow maximum active power and the IESO-required reactive power, provided all transmission elements are in service. If one of the main output transformers, or one of the N21J or N21J transmission lines, is on outage, the remaining output transformer is not adequate for the maximum active power and the IESO-required reactive power of the project.
4. The project voltage ride-through settings do not meet the requirements of the NERC PRC-024 reliability standard.
5. Based on the project's technical data provided by the connection applicant, the project droop settings and regulation deadband do not meet the requirements of Category 2 of Appendix 4.2 of the Market Rules.
6. A line end opening event of either N21J or N22J at Nanticoke TS may result in a reverse power flow through the Jarvis TS and Stelco CTS transformers. This can happen, for example, with the Nanticoke K2L21 breaker out of service and circuit N6M lost due to a contingency or with Nanticoke P1L22 breaker out of service and circuit N37S lost due to contingency.

IESO Requirements for Connection

Specific Requirements:

Requirements for the Connection Applicant

1. The project is required to have the capability to inject or withdraw reactive power continuously (i.e. dynamically) at the high voltage terminal of the main output transformer up to 33% of its rated active power at all levels of active power output and typical transmission system voltages.

   As identified in finding #2, the project does not meet this requirement. The connection applicant is required to address this shortcoming in a way that is acceptable to the IESO. For example, increasing the main output transformers' ULTC range to +12% instead of +10% or replacing the main output transformers with those that have a lower impedance are acceptable solutions. Any proposed alternative to mitigate this issue will be subject to the IESO's approval. The connection applicant has the obligation to confirm this capability during the commissioning tests.
2. The project shall control the voltage at a point whose impedance (based on rated apparent power and voltage of the project) is not more than 13% from the high-voltage terminals of the main output transformers.
3. The connection applicant is required to provide all the missing equipment data identified in Appendix B during the Market Registration process. The connection applicant shall ensure that all equipment is appropriately sized for its duty and that its short circuit capability is adequate.
4. To address finding #3, the connection applicant is required to use transformers with higher ratings to avoid limiting the project's capability. Alternatively, the connection applicant shall reduce the maximum active power injection or withdrawal during line or transformer outages, in order to avoid overloading of the main output transformers.
5. To address finding #4, the connection applicant is required to ensure the project meets, at a minimum, the voltage ride-through requirements identified in NERC PRC-024 reliability standard.
6. To address finding #5, the connection applicant is required to ensure the project regulates frequency with an average droop based on maximum active power adjustable between 3% and 7% and set at 4%. Regulation deadband shall not be wider than ±0.06%.
7. The connection applicant is required to implement the requirements specified in the Protection Impact Assessment (PIA) prepared by the transmitter. The PIA has been provided in Appendix E.
8. To address finding #6, the connection applicant shall coordinate with the transmitter to find solutions acceptable to the IESO to prevent the reverse power flow through the Jarvis TS and Stelco CTS transformers; the installation of a Remedial Action Scheme for this purpose is not an acceptable solution.

General Requirements:

The connection applicant shall satisfy all applicable requirements specified in the Market Rules, the Transmission System Code (TSC) and reliability standards. Some of the general requirements that are applicable to this project are presented in detail in Appendix A: General Requirements of this report.

Recommendation

1. Power transformers with a high side, wye grounded winding with terminal voltage greater than 200 kV are subject to North American Electric Reliability Corporation (NERC) standard TPL-007, Transmission System Planned Performance for Geomagnetic Disturbance Events. As per NERC standard TPL-007, the Planning Coordinator in conjunction with its Transmisson Planner are required to implement a process(es) to obtain Geomagnetic Disturbance (GMD) measurement data, via geomagnetically-induced currents (GIC) monitors, which will aid in model validation and situational awareness. This data will more accurately support the owner of the applicable power transformer(s) to conduct a thermal impact assessment if required in the future. As such, it is recommended that the connection applicant makes provision(s) to install monitoring equipment for GIC on the new transformer(s).

Appendix A: General Requirements

The connection applicant shall satisfy all applicable requirements specified in the Market Rules, the Transmission System Code and reliability standards. This section highlights some of the general requirements that are applicable to the project.

1. The connection applicant must notify the IESO at connection.assessments@ieso.ca as soon as they become aware of any changes to the project scope or data used in this assessment. The IESO will determine whether these changes require a re-assessment.
2. The connection applicant shall ensure that the BPS elements are in compliance with the applicable NPCC criteria and the BES elements in compliance with the applicable NERC reliability standards. To determine the standard requirements that are applicable, the IESO provides mapping tools titled "NPCC Criteria Mapping Spreadsheet" for BPS elements and "NERC Reliability Standard Mapping Tool/Spreadsheet" for BES elements at the IESO's website of Applicability Criteria for Compliance with Reliability Requirements.

   Note, the connection applicant may request an exception to the application of the BES definition. The procedure for submitting an application for exemption can be found in Market Manual 11.4: "Ontario Bulk Electric System (BES) Exception" at the IESO's website.

   The IESO's criteria for determining applicability of NERC reliability standards and NPCC Criteria can be found in the Market Manual 11.1: "Applicability Criteria for Compliance with NERC Reliability Standards and NPCC Criteria" at the IESO's website.

   Compliance with these reliability standards will be monitored and assessed as part of the IESO's Ontario Reliability Compliance Program. For more details about compliance with applicable reliability standards, the connection applicant is encouraged to contact orcp@ieso.ca and also visit the Ontario Reliability Compliance Program webpage.

   However, like any other system element in Ontario, the BPS and BES classifications of the project will be periodically re-evaluated as the electrical system evolves.
3. As per Appendix 4.2 of the Market Rules, the connection applicant shall ensure that the generation facility has the capability to operate continuously between 59.4 Hz and 60.6 Hz and for a limited period of time in the region bounded by straight lines on a log-linear scale defined by the points (0.0 s, 57.0 Hz), (3.3 s, 57.0 Hz), and (300 s, 59.0 Hz) and the straight lines on a log-linear scale defined by the points (0.0 s, 61.8 Hz), (8 s, 61.8 Hz), and (600 s, 60.6 Hz).
4. The facility shall regulate speed/frequency with an average droop based on maximum active power adjustable between 3% and 7% and set at 4% unless otherwise specified by the IESO. Regulation deadband shall not be wider than ±0.06%. Speed/frequency shall be controlled in a stable fashion in both interconnected and island operation. A sustained 9% change of applicable rated active power as defined in category 4 after 10 s in response to a step change of speed of 0.5% during interconnected operation shall be achievable.
5. The project is directly connected to the IESO-controlled grid, and thus, according to Appendix 4.2 of the Market Rules, the connection applicant shall ensure that the project has the capability to:

- continuously supply all levels of active power output within a +/- 5% range of its rated terminal voltage. Rated active power is the smaller output at either rated ambient conditions (e.g. temperature, head, wind speed, solar radiation) or 90% of rated apparent power. For electricity storage facilities, rated active power values shall be separately specified for both injection and withdrawal operations. To satisfy steady-state reactive power requirements, active power reductions to rated active power are permitted;
- Continuously (i.e., dynamically) inject or withdraw reactive power at the high-voltage terminal of the main output transformer up to 33% of rated active power at all levels of active power output, and at the typical transmission system voltage, except where a lesser continually available capability is permitted with the IESO's approval. A conventional synchronous unit with a power factor range of 0.90 lagging and 0.95 leading at rated active power connected via a main output transformer impedance not greater than 13% based on generation unit rated apparent power is acceptable. Reactive power losses or charging between the high-voltage terminal of the main output transformer and the connection point shall be addressed in a manner permitted by IESO approval;
- Regulate voltage automatically within ±0.5% of any set point within ±5% of rated voltage at the low-voltage terminal of the main output transformer if the transformer impedance is not more than 13% based on the rated apparent power of the generation facility, or electricity storage facility or at a point approved by the IESO. Reactive power-voltage droop or AVR reference load current compensation shall not be enabled without IESO approval. The response of the project for voltage changes shall be similar to or better than the response of a generation facility with a synchronous generation unit and an excitation system that meets the requirements of Appendix 4.2.
- For a constant voltage at the high-voltage terminal of the main output transformer, achieve a sustained reactive power change of 30% of generation facility or electricity storage facility rated apparent power at the low-voltage terminal of the main output transformer within 3s following a step change no larger than 4% to the AVR voltage reference. AVR response to the voltage error signal must be consistent over the entire operating range.
- As per the Market Rules requirements, the project shall operate in voltage control mode and provide its reactive power capability requirements by using all voltage control methods available within the project. The overall automatic voltage regulation requirement for the project is summarized as follow:
    - All inverters shall control the voltage at a point whose impedance (based on rated apparent power and voltage of the project) is not more than 13% from the high voltage terminal of the main output transformer. Appropriate control slope is adopted for reactive power sharing among the inverters as well as with adjacent generators. The reference voltage will be specified by the IESO during operation;

- Shunt capacitors and reactors (when applicable) shall be automatically switched to regulate the overall reactive power output from the project's inverters (or dynamic reactive power sources) to approximately zero output. The dead band for shunt switching will be set to no less than ±60% of the smallest shunt to avoid control hunting. The switching time of the shunt compensation shall be fast enough to satisfy the requirements relevant to Appendix 4.2 Categories 5, 6, and 12. After having been switched, the shunt compensation shall become available for the next operation within 5 minutes.
- The main transformer under-load tap changer (ULTC) (when available) shall be adjusted manually to regulate the collector bus voltage such that it is within normal range and close to about 100% of nominal voltage.
- In the event that the voltage control system of the project becomes unavailable, each inverter must automatically switch to reactive power control or terminal voltage control, to maintain its reactive power output or terminal voltage to the value prior to the loss of signal from the voltage control system. Depending on system conditions, further action for reliability purposes would be directed by the IESO.

- The connection applicant shall provide a finalized copy of the functional description of the project's control systems for approval to the IESO before the project is given final approval to connect.

6. In accordance to Appendix 4.2 of the Market Rules, the connection applicant shall ensure the project shall have the capability to ride-through routine switching events and design criteria contingencies assuming standard fault detection, auxiliary relaying, communication, and rated breaker interrupting times, unless disconnected by configuration. For Inverter-based units, momentary current cessation or reduction of output current during system disturbances is not permitted without IESO approval.

   The connection applicant will be required to demonstrate the project's voltage ride-through capability during commissioning by either providing manufacturer test results or monitoring several variables under a set of IESO specified field tests, and the test results must be verifiable using the dynamic models provided for the project.
7. The connection applicant shall ensure that the project's equipment meet the voltage requirements specified in section 4.2 and section 4.3 of the Ontario Resource and Transmission Assessment Criteria (ORTAC).
8. According to Section 6.1.2 of the TSC, the connection applicant must ensure the project's transmission connection equipment is designed to withstand the fault levels in the area. According to Section 6.4.4 of the TSC, if any future system changes result in an increased fault level higher than the project's equipment capability, the connection applicant is required to replace that equipment with higher rated equipment capable of withstanding the increased fault level, up to the maximum fault level specified in Appendix 2 of the TSC.

   It is the connection applicant's responsibility to verify that all equipment and circuit breakers within the project are appropriately sized for the local fault levels.
9. The connection applicant shall ensure that the circuit breakers/switchers installed at the project have rated interrupting time that satisfies Appendix 2 of the TSC. Fault interrupting devices installed at the project must be able to interrupt fault currents at the applicable maximum continuous voltage as specified in Section 4.2 and Section 4.3 of ORTAC.

10. The connection applicant shall ensure that the protection systems are designed to satisfy all the requirements of the TSC. New protection systems must be coordinated with existing protection systems. Protection systems within the project shall only trip the appropriate equipment isolating the fault.

    Associated overvoltage protective relaying must be set to ensure that the project's equipment does not automatically trip for voltages up to 5% above the equipment's corresponding maximum continuous voltage as specified in section 4.2 of the ORTAC.

    BPS elements are deemed by the IESO to be essential to system reliability and security and must be protected by redundant protection systems in accordance with Section 8.2 of the TSC. These redundant protection systems must satisfy all requirements of the TSC, and in particular, they must be physically separated and not use common components, common battery banks, or common instrument transformer secondary windings.

    The protection systems for transmission voltage BES elements (whose rated voltage is higher than 100 kV) must be redundant. Redundancy must be present in protective relaying for normal fault clearing and control circuitry associated with protective functions including trip coils of the circuit breakers or other interrupting devices. These redundant protection systems must not use common instrument transformer secondary windings. A single communication system, if used, must be monitored and reported and a single DC supply, if used, must be monitored and reported for both low voltage and open circuit.

    As the electrical system evolves, transmission voltage non-BPS or non-BES elements (whose rated voltage is higher than 100 kV) within the project, may be re-classified as BPS elements or BES elements. The connection applicant is recommended to design the protection systems for these elements according to the protection requirements for BPS elements or have adequate provisions for future upgrade to meet those requirements.

    The connection applicant shall ensure that the project's automatic reconnection capability, if available, be disabled. Upon its disconnection following a contingency, the connection applicant must obtain the IESO's approval before reconnecting the project to the IESO-controlled grid.

    As currently assessed, the project is not required to participate in a Remedial Action Scheme (RAS). However, the connection applicant is required to have adequate provision in the design of the project's protections and controls to allow for future installation of RAS equipment in case needed to improve transfer capability in the vicinity of the project or to accommodate transmission reinforcement projects. If the project is required to participate in a RAS, its RAS facilities must comply with the NPCC Reliability Reference Directory #7 for Type 1 RAS and NERC RAS Standards. In particular, if the RAS is designed to have redundant 'A' and 'B' protection systems at a single location, they must be on different non-adjacent vertical mounting assemblies or enclosures. Two independent trip coils are required on any breakers to be selected for L/R as part of a RAS design.
11. The connection applicant shall ensure that the connection equipment is designed to be fully operational in all reasonably foreseeable ambient conditions. Failures of the connection equipment must be contained within the project and have no adverse impact on the IESO-controlled grid.
12. The connection applicant shall install a permanent device for disturbance recording that meets the technical specifications provided in Section 2.7 of Market Manual 1.6: Performance Validation (formerly Market Manual 2.20). The quantities to be recorded and the trigger settings will be provided by the IESO during the Market Registration process
13. According to Section 7.3A of Chapter 4 of the Market Rules, the connection applicant shall provide to the IESO the applicable telemetry data listed in Appendix 4.24 of the Market Rules on a continual basis. The data shall be provided with equipment that meets the requirements

set forth in Appendix 2.2, Chapter 2 of the Market Rules, in accordance with the performance standards set forth in Appendix 4.25, subject to Section 7.6A of Chapter 4 of the Market Rules. The whole telemetry list will be finalized during the IESO's Market Registration process.

As part of the IESO's Market Registration process, the connection applicant must also complete end to end testing of all necessary telemetry points with the IESO to ensure that standards are met and that sign conventions are understood. All found anomalies must be corrected before IESO's final approval to connect any phase of the project is granted.

14. The connection applicant must initiate the IESO's Market Registration process at least eight months prior to the commencement of any project related outages.

    The connection applicant is required to provide "as-built" equipment data for the project during the IESO Market Registration process. If the submitted equipment data differ materially from the ones used in this assessment, then further analysis of the project may need to be done by the IESO before final approval to connect is granted.

    Models and data, including any controls that would be operational, must be provided to the IESO. This includes both PSS/E and DSA software standard library models representing the new equipment for further IESO, NPCC and NERC analytical studies. The models and data may be shared with other reliability entities in North America as needed to fulfill the IESO's obligations under the Market Rules, NPCC and NERC rules. The connection applicant may need to contact the software manufacturers directly, in order to have the models included in their packages. This information should be submitted at least eight months before energization to the IESO-controlled grid, to allow the IESO to incorporate this project into IESO work systems and to perform any additional reliability studies. The connection applicant shall submit an EMTP/PSCAD study during the Market Registration stage that shows the facility will not be tripped by external three phase faults cleared in normal time or phase to ground faults cleared in breaker failure time. The faults shall be applied on the 230 kV transmission circuit N22J at Oneida BESS. The results of the study will be used during Performance Validation stage to tune the dynamic generic models used by the IESO in planning/operational assessments.

    As part of the IESO Market Registration process, the connection applicant must also provide evidence to the IESO confirming that the project's equipment installed meets the Market Rules requirements and matches or exceeds the performance predicted in this assessment. This evidence shall be either type tests done in a controlled environment or commissioning tests done on-site. In either case, the testing must be done not only in accordance with widely recognized standards, but also to the satisfaction of the IESO. Until this evidence is provided and found acceptable to the IESO, the Market Registration process will not be considered complete and the connection applicant must accept any restrictions the IESO may impose upon this project's participation in the IESO-administered markets or connection to the IESO-controlled grid. The evidence must be supplied to the IESO within 30 days after completion of commissioning tests. Failure to provide evidence may result in disconnection from the IESO-controlled grid.

    If the submitted models and data differ materially from the ones used in this assessment, then further analysis of the project may need to be done by the IESO before final approval to connect is granted.

    At the sole discretion of the IESO, performance tests may be required at generation and transmission facilities. The objectives of these tests are to demonstrate that equipment performance meets the IESO requirements, and to confirm models and data are suitable for IESO purposes. The transmitter may also have its own testing requirements. The IESO and the transmitter will coordinate their tests, share measurements and cooperate on analysis to the extent possible.

Once the IESO's Market Registration process has been successfully completed, the IESO will provide the connection applicant with a Registration Approval Notification (RAN) document, confirming that the project is fully authorized to connect to the IESO-controlled grid. For more details about this process, the connection applicant is encouraged to contact IESO's Market Registration at market.registration@ieso.ca

15. The connection applicant shall ensure that wholesale revenue metering installations comply with Chapter 6 of the Market Rules. This includes any intermediate project stages such as installation of temporary equipment or the use of mobile transformers. For more details, the connection applicant is encouraged to seek advice from their Metering Service Provider (MSP) or from the IESO metering group in early stages of project design.
16. As per Market Manual 1.4, the connection applicant will be required to provide a status report of its proposed project with respect to its progress upon request of the IESO using the project status report form on the IESO website. Failure to comply with project status requirements listed in Market will result in the project being withdrawn.

    The connection applicant will be required to also provide updates and notifications in order for the IESO to determine if the project is "committed" as per Section 3.3 of Market.

Appendix B: Project Data (Confidential)

Appendix C: Study Scope of Work (Confidential)

Appendix D: Detailed Study Results (Confidential)

Appendix E: Protection Impact Assessment (Confidential)

Independent Electricity System Operator
1600-120 Adelaide Street West
Toronto, Ontario M5H 1T1

Phone: 905.403.6900
Toll-free: 1.888.448.7777
E-mail: customer.relations@ieso.ca

ieso.ca

@IESO_Tweets
facebook.com/OntarioIESO
linkedin.com/company/IESO

ieso
Connecting Today.
Powering Tomorrow.